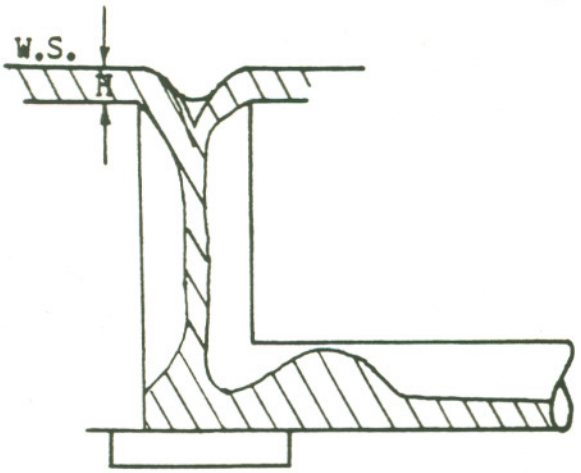

Weir Control at Entrance

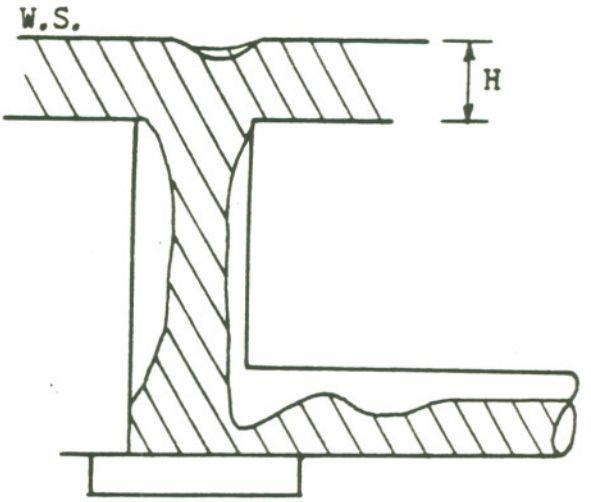

Orifice Control at Entrance of Conduit

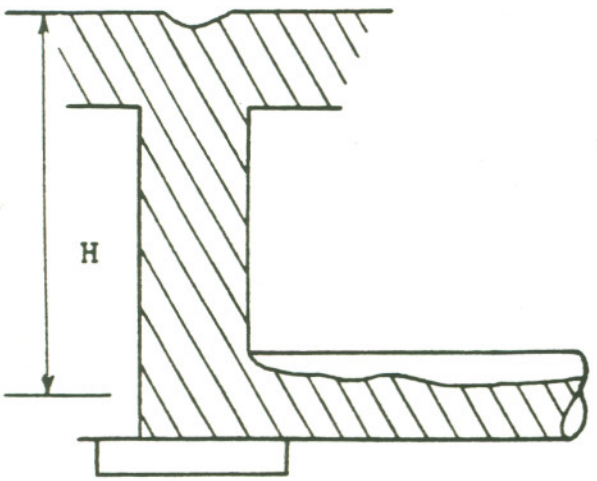

Orifice Control at Entrance of Barrel or Short Tube Control

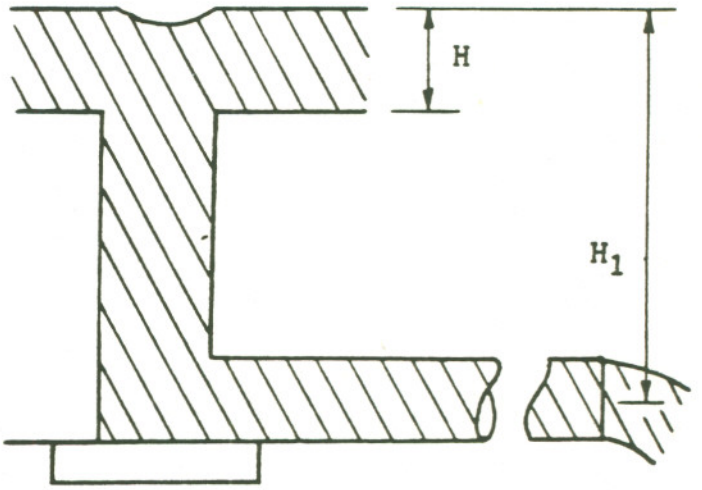

Full Pipe Flow

Figure 6-27 Chart for determining inlet proportions and required head over inlet

HEAD DISCHARGE TABLE FOR CORRUGATED METAL PIPE DROP INLETS (WEIR FLOW CONDITION)

Riser Diameter Inches	Head in Feet												
	0.4	0.5	0.6	0.7	0.8	0.9	1.0	1.1	1.2	1.3	1.4	1.5	1.6
15	2.7	3.8	4.9	6.3	ORIFICE								
18	3.2	4.5	5.9	7.6	9.3	10.9	FLOW						
21	3.8	5.3	7.0	8.8	10.7	12.8	15.0	CONDITIONS					
24	4.3	6.0	7.9	10.1	12.3	14.6	17.1	19.7	22.4	CONTROL			
30	5.4	7.5	9.8	12.6	15.4	18.2	21.4	24.6	28.0	31.7	35.5		
36	6.4	9.0	11.8	15.1	18.5	21.8	25.7	29.5	33.6	38.0	42.6	47.2	51.9
42	7.5	10.5	13.8	17.7	21.6	25.5	30.0	34.5	39.3	44.4	49.8	55.1	60.5
48	8.6	12.0	15.7	20.2	24.6	29.1	34.2	39.4	44.8	50.7	56.8	63.0	69.1
54	9.6	13.5	17.7	22.7	27.7	32.8	38.5	44.3	50.5	57.0	64.0	70.9	77.8
60	10.7	15.0	19.7	25.2	30.8	36.4	42.8	49.2	56.1	63.3	71.0	78.7	86.4

Riser Diameter Inches	Head in Feet								
	1.7	1.8	1.9	2.0	2.1	2.2	2.3	2.4	2.5
42	66.5	72.5	ORIFICE FLOW						
48	76.0	82.8	89.7	96.9	104.1	CONDITIONS CONTROL			
54	85.5	93.2	100.9	109.0	117.1	125.6	134.5	143.3	
60	95.0	103.6	112.1	121.1	130.1	139.5	149.3	159.2	169.0

NOTES: (1) The discharge capacities shown in this table are based on the formula:

$$Q_2 = C_2 L H_2^{3/2}$$

Q_2 = discharge capacity of weir, in c.f.s.
C_2 = weir coefficient = 3.33
L = length of weir crest, in feet (for circular riser with headwall, L = 2.57 times diameter of riser).
H_2 = distance from crest of riser to water surface in reservoir, in feet.

(2) The diameter of the riser should be at least 1¼ times the diameter of barrel.

(3) Use this table in conjunction with orifice flow and full pipe flow conditions to determine capacity of the drop inlet.

Figure 6-27 Chart for determining inlet proportions and required head over inlet

HEAD DISCHARGE TABLE FOR CORRUGATED METAL PIPE
DROP INLETS
(Orifice Control Conditions at Crest of Riser or Entrance to Barrel)

Dia. Inches	Head in Feet																
	1.0	1.5	2.0	2.5	3.0	3.5	4.0	4.5	5.0	5.5	6.0	6.5	7.0	7.5	8.0	8.5	9.0
12	4.1	5.0	5.8	6.3	7.1	7.7	8.2	8.7	9.1	9.6	10.0	10.4	10.8	11.2	11.6	11.9	12.3
15	6.7	8.2	9.5	10.6	11.6	12.6	13.4	14.3	15.0	15.8	16.5	17.1	17.8	18.4	19.0	19.6	20.2
18	10.1	12.3	14.3	16.0	17.5	18.9	20.2	21.4	22.5	23.6	24.7	25.7	26.7	27.6	28.5	29.4	30.2
21	13.8	17.0	19.6	21.9	24.0	25.9	27.7	29.4	31.0	32.5	33.9	35.3	36.6	37.9	39.2	40.4	41.6
24	Weir Flow Controls	22.5	26.1	29.2	32.0	34.5	36.8	39.0	41.1	43.1	45.0	46.9	48.6	50.3	52.0	53.6	55.1
30		35.2	40.8	45.4	49.9	53.8	57.5	61.0	64.3	67.4	70.4	73.3	76.1	78.7	81.3	83.8	86.2
36			58.7	65.7	71.9	77.8	82.9	87.9	92.7	97.2	101.5	105.7	109.7	113.5	117.2	120.8	124.4
42			79.8	88.2	97.7	105.5	112.6	119.5	125.9	132.1	137.9	143.6	149.0	154.2	159.3	164.2	169.0
48				115.0	125.5	136.0	145.2	154.0	162.3	170.2	177.8	185.0	192.1	198.7	205.3	211.6	217.8

Figure 6-27 Chart for determining inlet proportions and required head over inlet

Sheet 3 of 3