BACKFILL DETAILS
SEE SHEET _____

CONDITIONS OF USE

BACKFILL: 3 TO 8 FEET
0 – 100% FINES
MACHINERY SURCHARGE LOADING CONDITIONS ALLOWED:
(SEE PA–DESIGN GUIDE 4)
STRUCTURAL SLAB OR PUSH–OFF ON WALL (A)
NONSTRUCTURAL SLAB ADJACENT TO OR ON WALL (B)

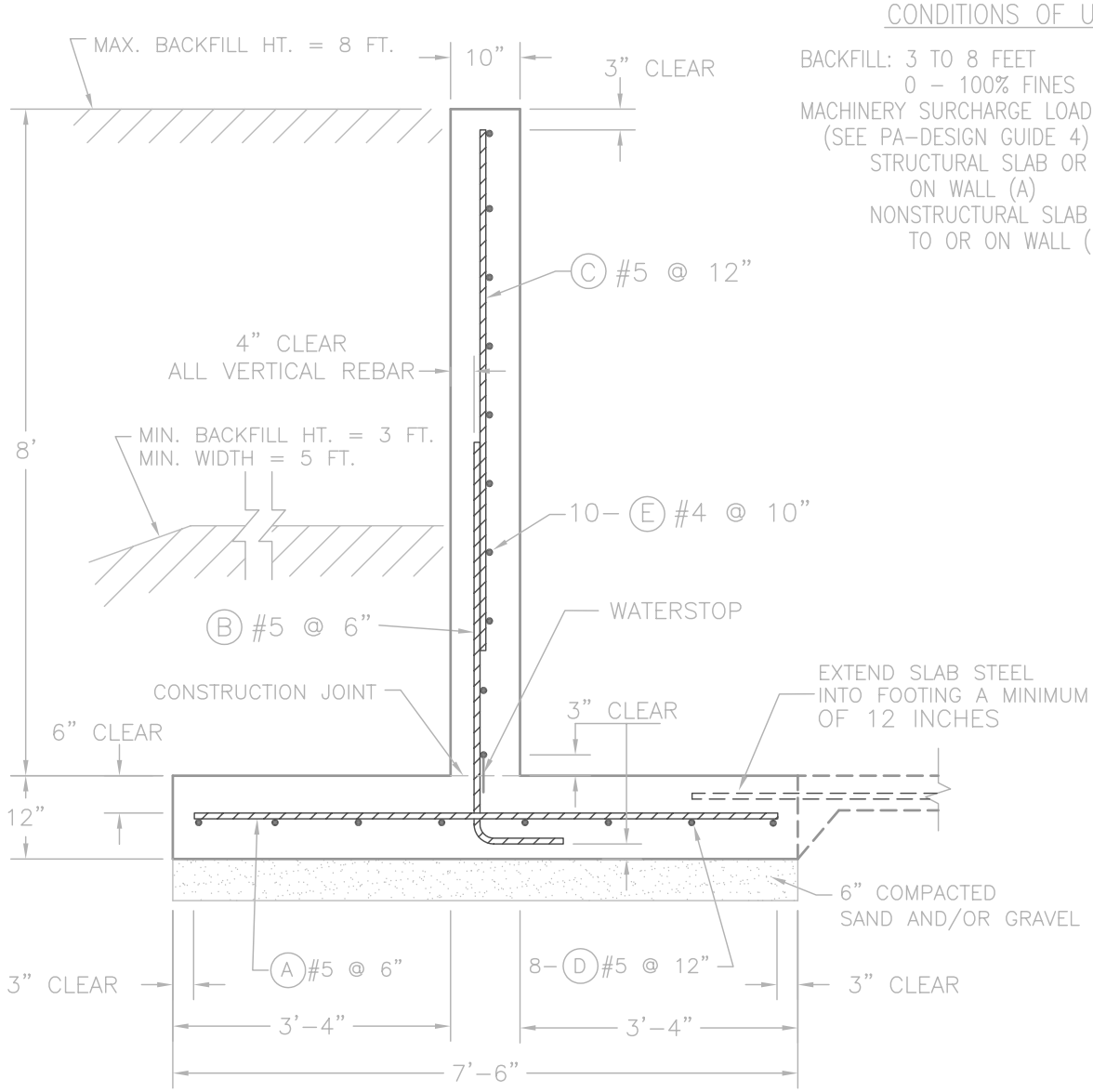

WALL SECTION

DESIGN VALUES

EARTH BACKFILL: 85 PSF/FT, EQUIVALENT FLUID PRESSURE
110 PCF (SOIL WEIGHT) AND >50% FINES
MANURE: 65 PSF/FT, EQUIVALENT FLUID PRESSURE
MACHINERY LOADING: 45 PSF EQUIVALENT FLUID PRESSURE REPRESENTING MACHINERY LOAD ON NONSTRUCTURAL SLAB

- ULTIMATE STRENGTH DESIGN (ACI 318–99)

CONCRETE STRENGTH: 4,000 PSI REBAR: GRADE 40

- COEFF. FRICTION (SOIL/CONCRETE) = 0.5
- MINIMUM SLIDING FACTOR OF SAFETY = 1.5
- WALL SLIDING RESTRAINT REQUIRED
- MINIMUM OVERTURNING FACTOR OF SAFETY = 2.0
- MIN. ALLOWABLE SUBGRADE BEARING CAPACITY = 2000 PSF
- VERTICAL WALL LOAD FOR SLABS BEARING ON WALLS AND PUSH–OFFS = 1000 LBS./FT.
- NOT DESIGNED TO SUPPORT BUILDINGS OR ROOFS

LINEAL FEET OF WALL _____

STEEL SCHEDULE (GRADE 40)

MARK	SIZE	TYPE	R	S	LENGTH	TOTAL LENGTH
A	#5	STR	---	---	7'–0"	
B	#5	2	4'–0"	1'–0"	5'–0"	
C	#5	STR	---	---	6'–3"	
D	#5	STR	---	---		
E	#4	STR	---	---		
N	#4	2	2'–0"	2'–0"	4'–0"	

STEEL DETAILS

BAR SIZE	BEND DIAMETER (D) INCHES	SPLICE LENGTH INCHES (MIN.) *
#4	3	16
#5	3–3/4	20

* IF TWO BARS OF DIFFERENT DIAMETER ARE SPLICED, USE THE LONGER SPLICE LENGTH.

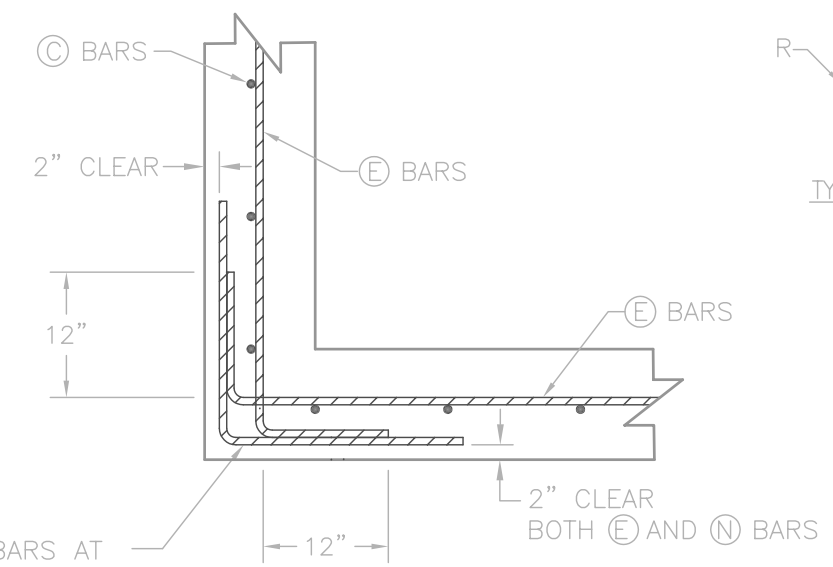

CORNER BAR SCHEMATIC
PLAN VIEW – TOP 4 FEET OF WALL SHOWN

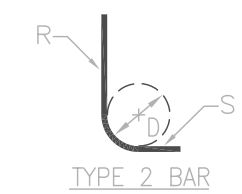

TYPE 2 BAR

CONSTRUCTION JOINT

LIQUID–TIGHT JOINT ___ YES ___ NO

LIQUID–TIGHT JOINT OPTIONS

1) NON–METALIC WATERSTOP (PVC)
2) HYDROPHILIC WATERSTOP

CORNER NOTES

1. PLACE FIRST VERTICAL BAR AT WALL CORNER OR NO FURTHER THAN ONE–HALF BAR SPACING FROM THE INSIDE CORNER.
2. HOOK CAN BE SEPARATE FROM Ⓔ BARS, PROVIDED THAT MINIMUM LAP SPLICE OF 16" FOR #4 BARS IS MET.
3. SEE WALL SECTION FOR EXACT LOCATIONS OF Ⓒ AND Ⓔ BARS.

THIS STANDARDIZED DESIGN MUST BE ADAPTED TO THE SPECIFIC SITE. IT WAS DEVELOPED IN COOPERATION WITH THE WISCONSIN DEPARTMENT OF AGRICULTURE, TRADE AND CONSUMER PROTECTION. THE DESIGN FOLDER IS FILED AT THE NRCS STATE OFFICE, 8030 EXCELSIOR DRIVE, MADISON, WISCONSIN 53717-2906

(ADAPTED FROM WI-586, APRIL 2005)

Date 06/24/05
Designed ____
Drawn TJA
Checked ____
Approved by ____

_____ COUNTY, PENNSYLVANIA
8' HIGH, 10" T-WALL, (BACKFILL 3-8 FT., ALL SOILS)
MACHINERY ALLOWED ON STRUCT. OR NONSTRUCT. SLAB

NRCS
Natural Resources Conservation Service
United States Department of Agriculture

File No. PA-028F
Drawing No. PA-028F
Sheet ____ of ____