TOP VIEW

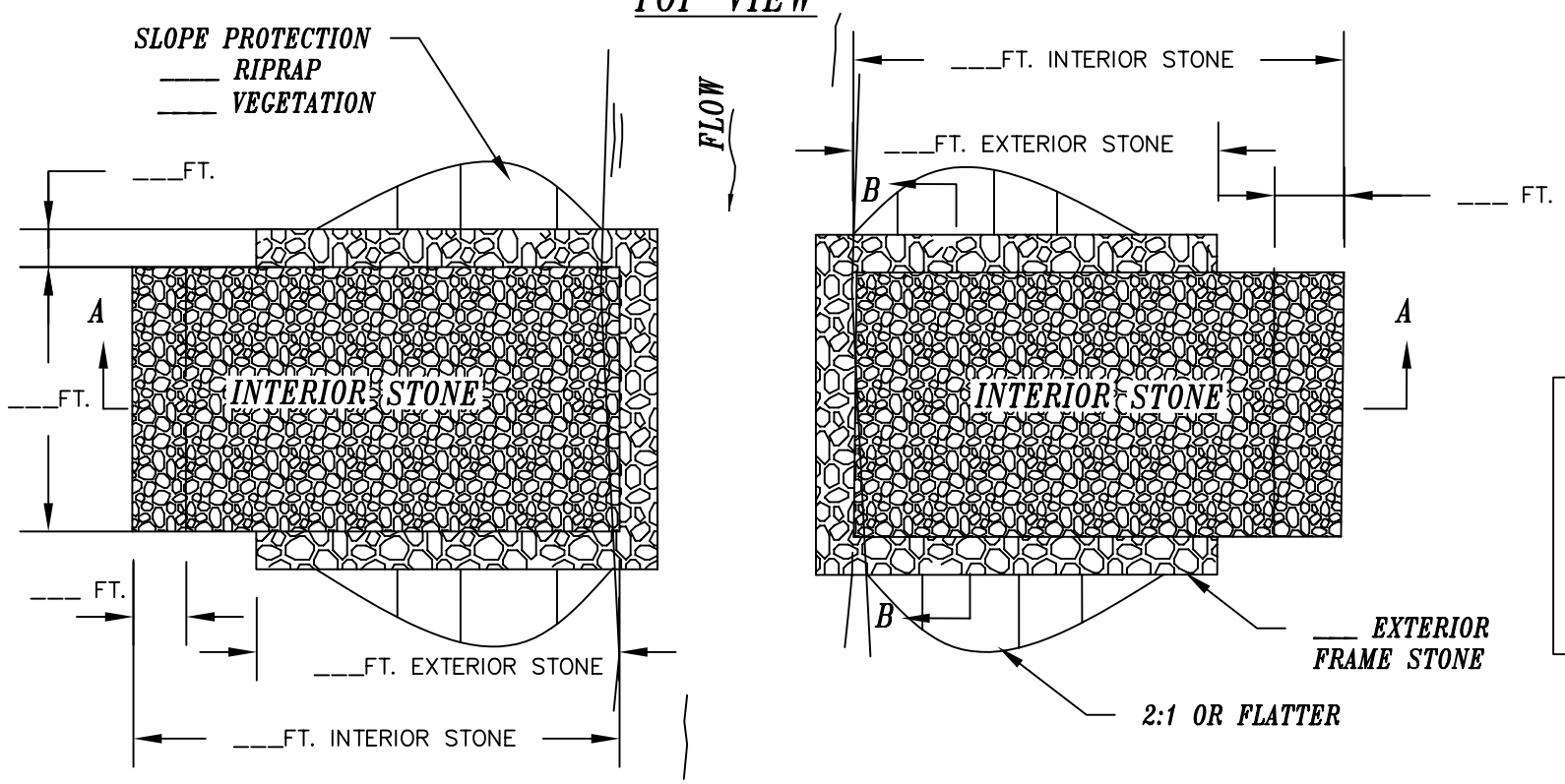

RIPRAP GRADATIONS				
Gradation Name	Size – Inches (sq. opening)			
	D_{100}	D_{85}	D_{50}	D_{15}
R–3	6	5	3	2
R–4	12	10	6	3
R–5	18	15	9	5
R–6	24	20	12	7
R–7	30	26	15	12
R–8	48	30	24	15

NOTES:
1. ALL SPOIL SHALL BE DEPOSITED OUTSIDE OF THE FLOODWAY AND WETLANDS.
2. DEPTH OF STONE FILL ABOVE NATURAL STREAMBED SHALL NOT EXCEED 6-INCHES.
3. AASHTO#1 STONE TO BE USED AS INTERIOR STONE. DEPTH OF STONE ___FT.
4. AASHTO#57 STONE TO BE USED TO FILL ANY SUBSEQUENT VOIDS ON INTERIOR STONE SURFACE.
5. _____ STONE SHALL BE USED AS EXTERIOR FRAME STONE. DEPTH OF STONE ___FT.
6. STONE SHALL BE KEYED INTO THE STREAMBANK AND BED.
7. INSTALL FENCING FOR LIVESTOCK EXCLUSION.

SECTION A–A

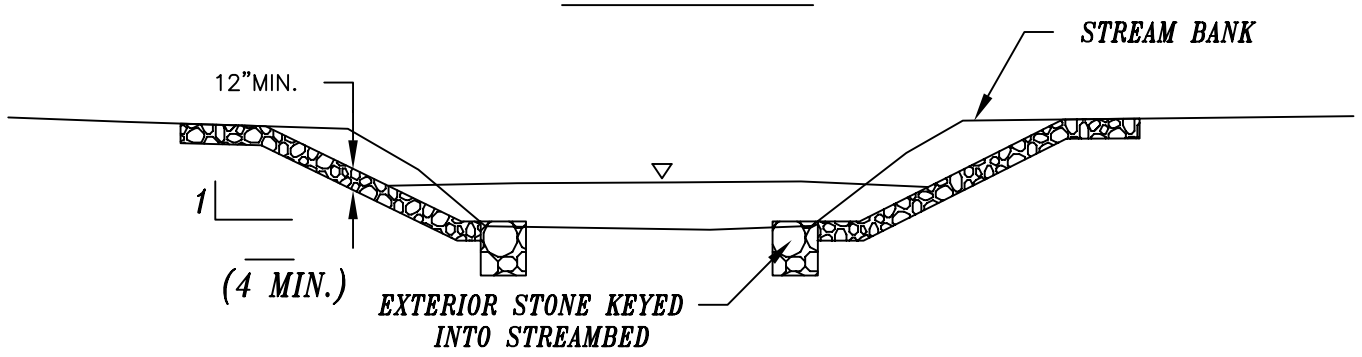

SECTION B–B

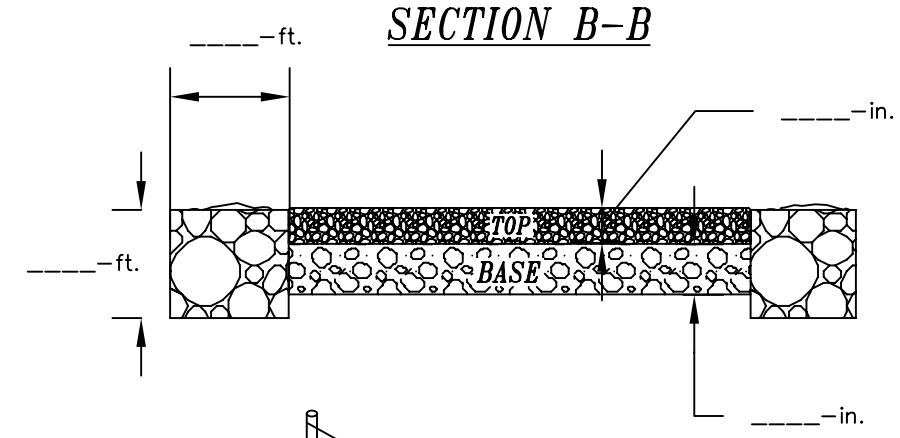

STREAMBANK CUT–SLOPE AND SLOPE PROTECTION
(shown with riprap side slopes)

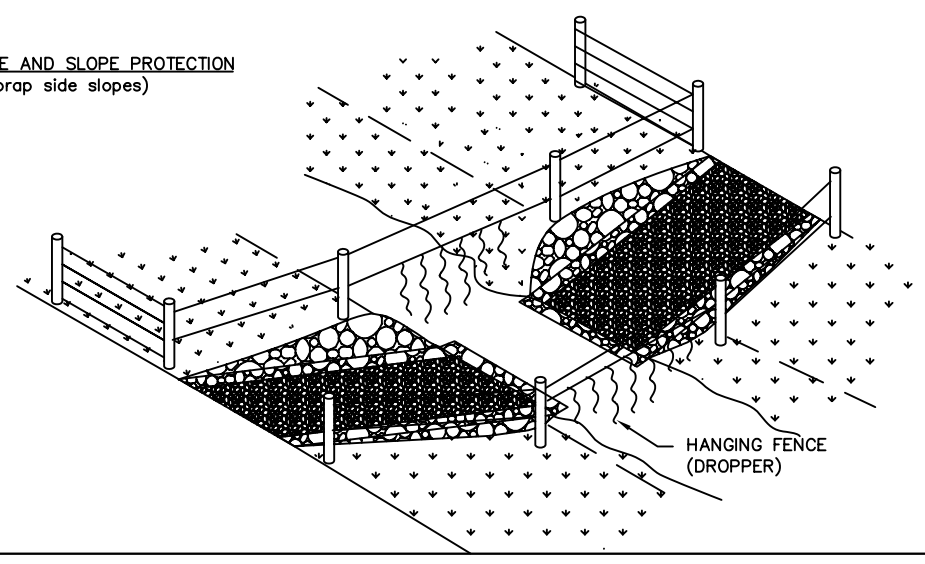

CROSSING AT SAME GRADE AS ORIGINAL STREAMBANK

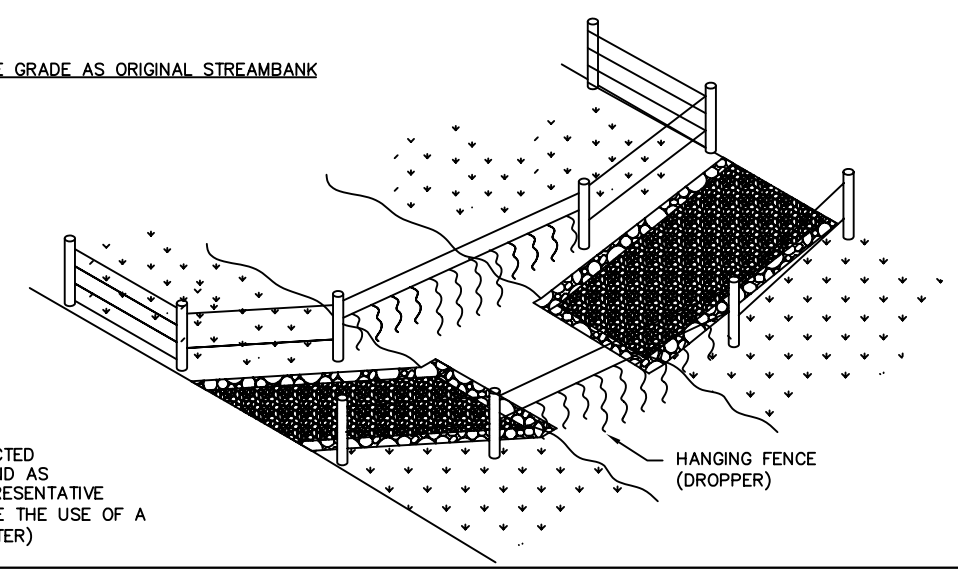

NOT TO SCALE

ALL FENCING TO BE CONSTRUCTED AS PER SPECIFICATION 382 AND AS APPROVED BY THE NRCS REPRESENTATIVE (LARGE STREAMS MAY REQUIRE THE USE OF A ENERGY LIMITER FOR HIGH WATER)

ADAPTED FROM PA D.E.P.
GENERAL PERMIT
BDWM-GP-6
DRAWING NO. 4

Date 10/06
Designed
Drawn DWL
Checked
Approved by

___ COUNTY, PENNSYLVANIA

STABLE BOTTOM STREAM CROSSING DETAILS

NRCS
Natural Resources Conservation Service
United States Department of Agriculture

File No. PA-033.dwg
Drawing No. PA-033
Sheet ___ of ___