A

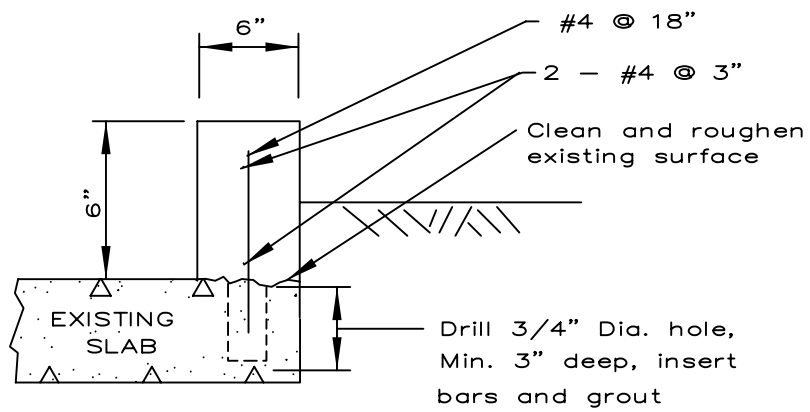

B

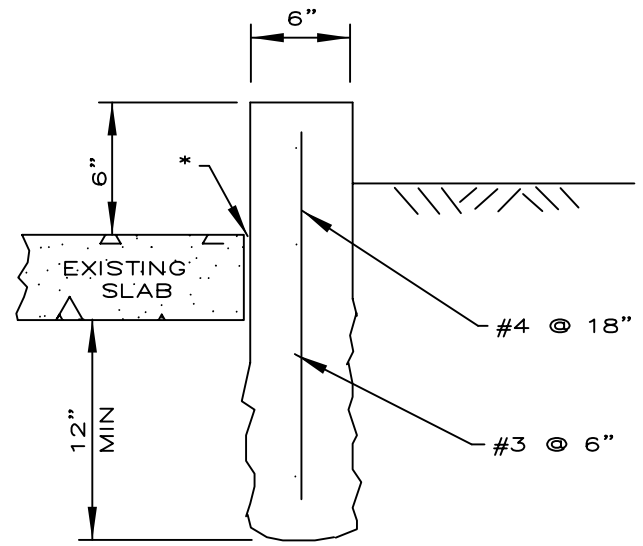

C

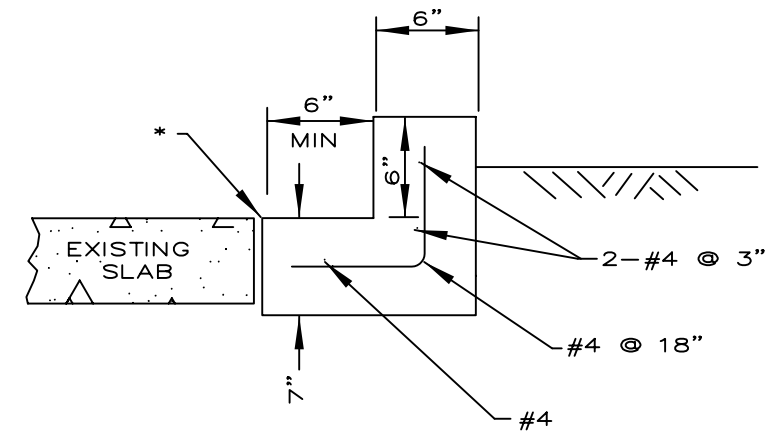

D

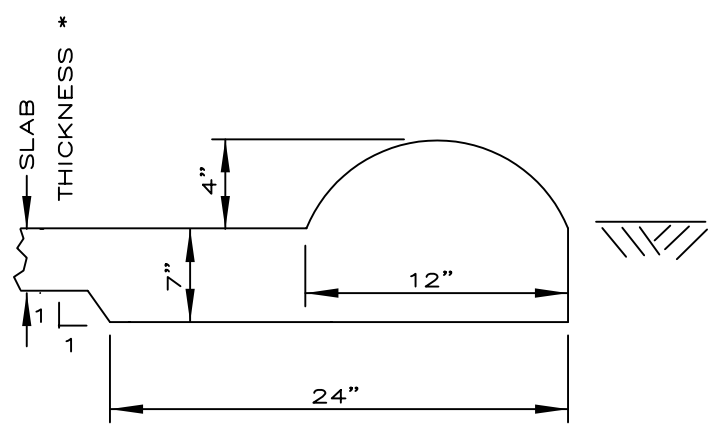

E

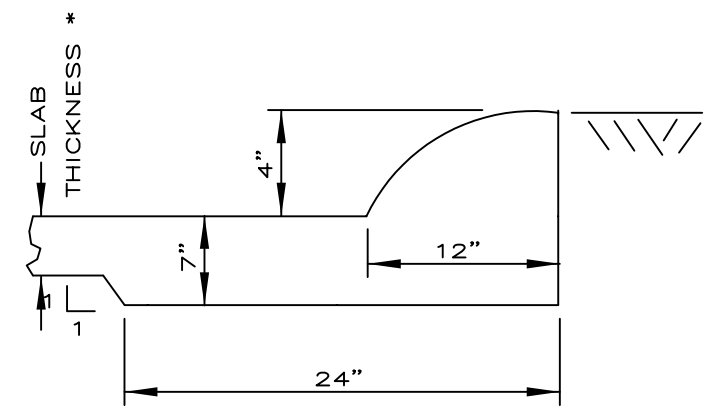

F

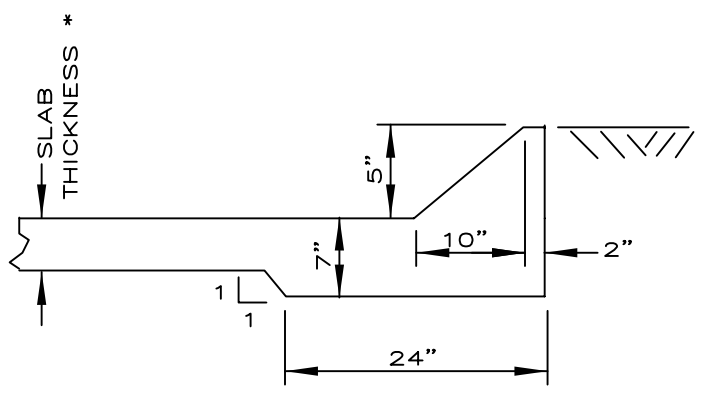

* See PA–004 for joint and reinforcement details.

NOTES: 1. 2" Min. cover on all rebars.

2. Continue new slab reinforcement into curbs.

Not To Scale

Date 3/92 3/92

Designed A. WOOD

Drawn S. DUNN

Checked

Approved by

_____ COUNTY, PENNSYLVANIA

CONCRETE CURBS

NRCS

Natural Resources Conservation Service
United States Department of Agriculture

File No. PA-038.dwG

Drawing No. PA-038

Sheet ____ of ____