NOTES

1. PROVIDE SAFETY GUARD, SEE PA-039.
2. PLACE CLEAN GRANULAR BACKFILL BEHIND THE SUPPORT WALL AND THOROUGHLY COMPACT.
3. MINIMUM MATERIAL STRENGTHS: fc' = 4,000 psi
   fs = 60ksi (GRADE 60)
4. MINIMUM SOIL BEARING CAPACITY: 4000psf
5. MAXIMUM WHEEL LOAD: 2000lbs
6. EXISTING R/C WALL SHALL BE ADEQUATE TO SUPPORT LOADED RAMP.

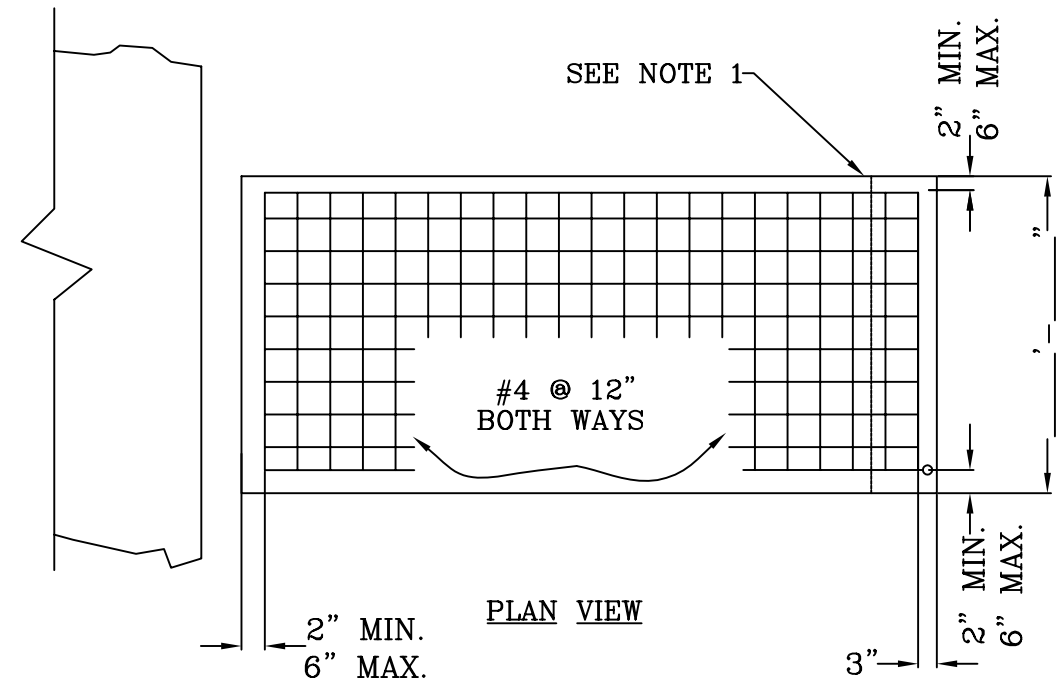

PLAN VIEW

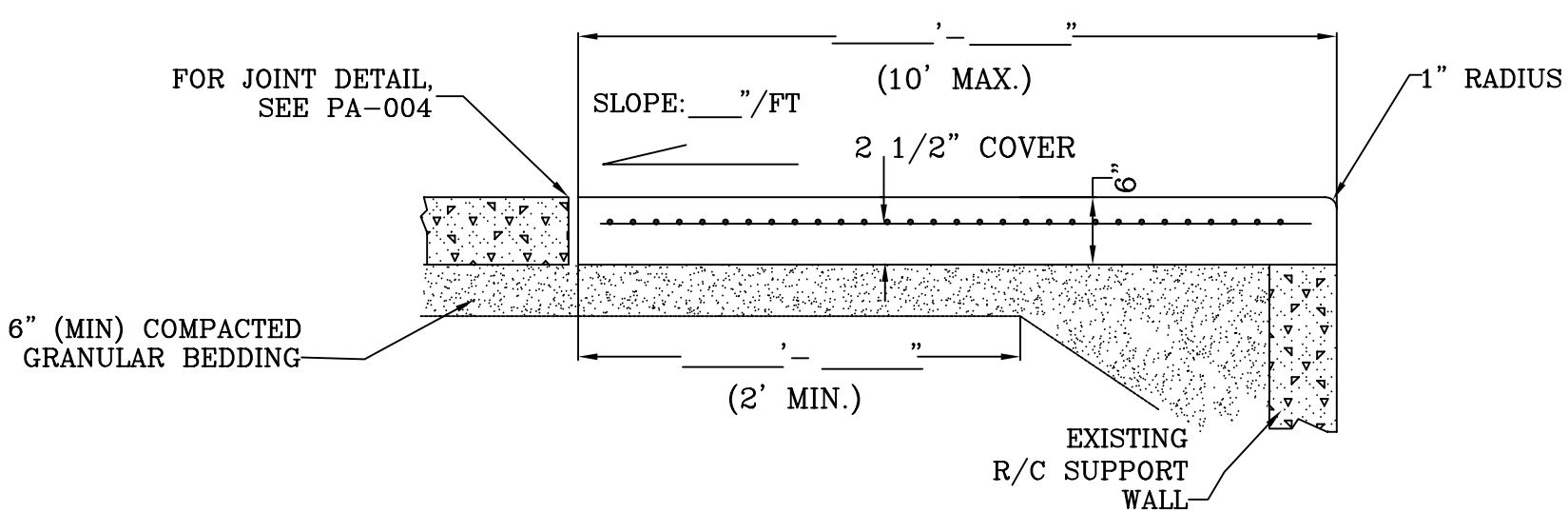

ELEVATION

Standard Drawing No. Pa-044

NOT TO SCALE

Designed ____ Date ____
Drawn ____
Checked ____
Approved by ____

_____ COUNTY, PENNSYLVANIA

SLAB PUSH-OFF (W/EXISTING WALL)

NRCS
Natural Resources Conservation Service
United States Department of Agriculture

File No. PA-044.DWG

Drawing No. 06/05/07 11:54
PA-044

Sheet ____ of ____