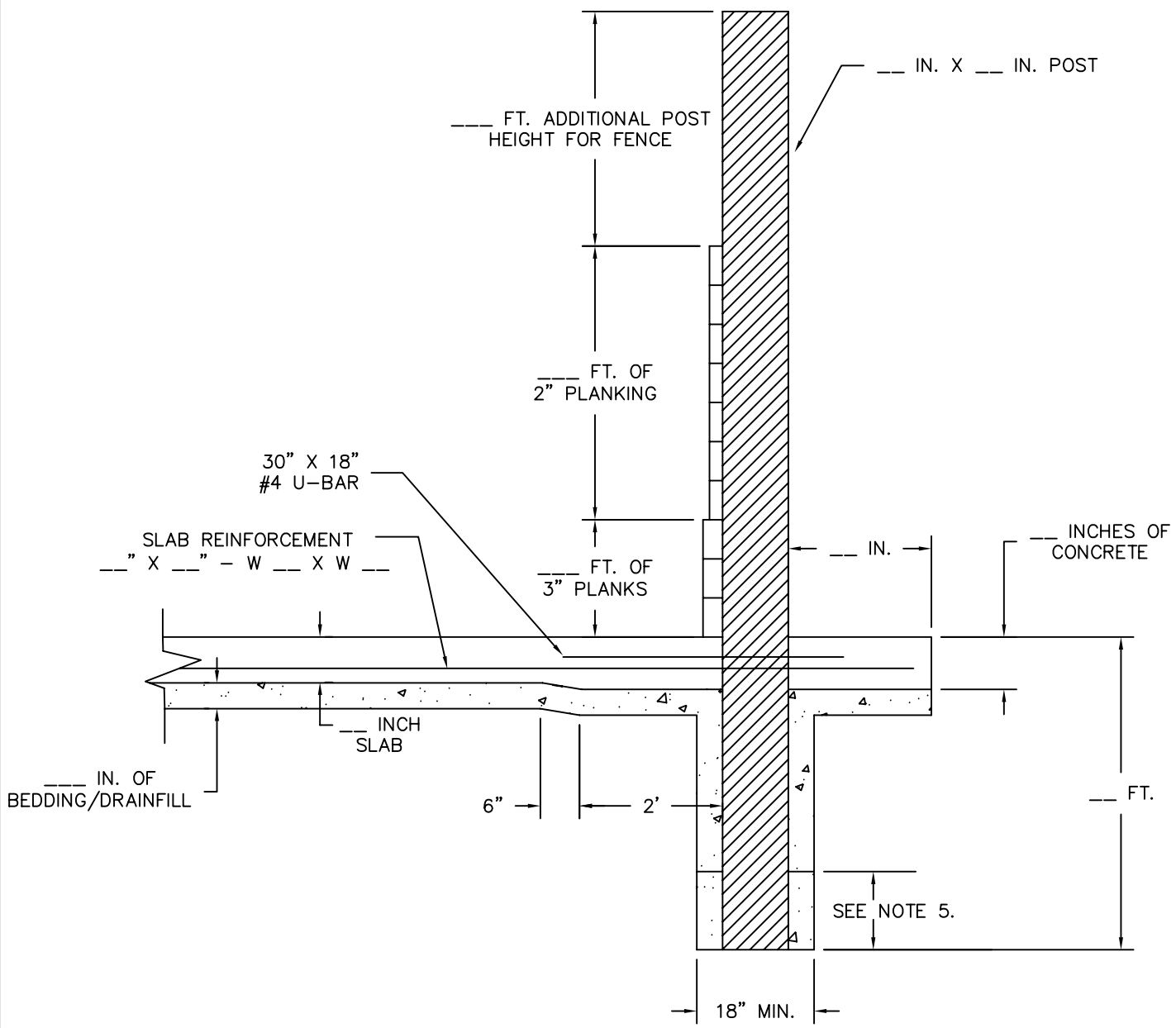

BACKFILL HOLE

WITH: BEDDING ___ / CONCRETE ___ — CHECK ONE

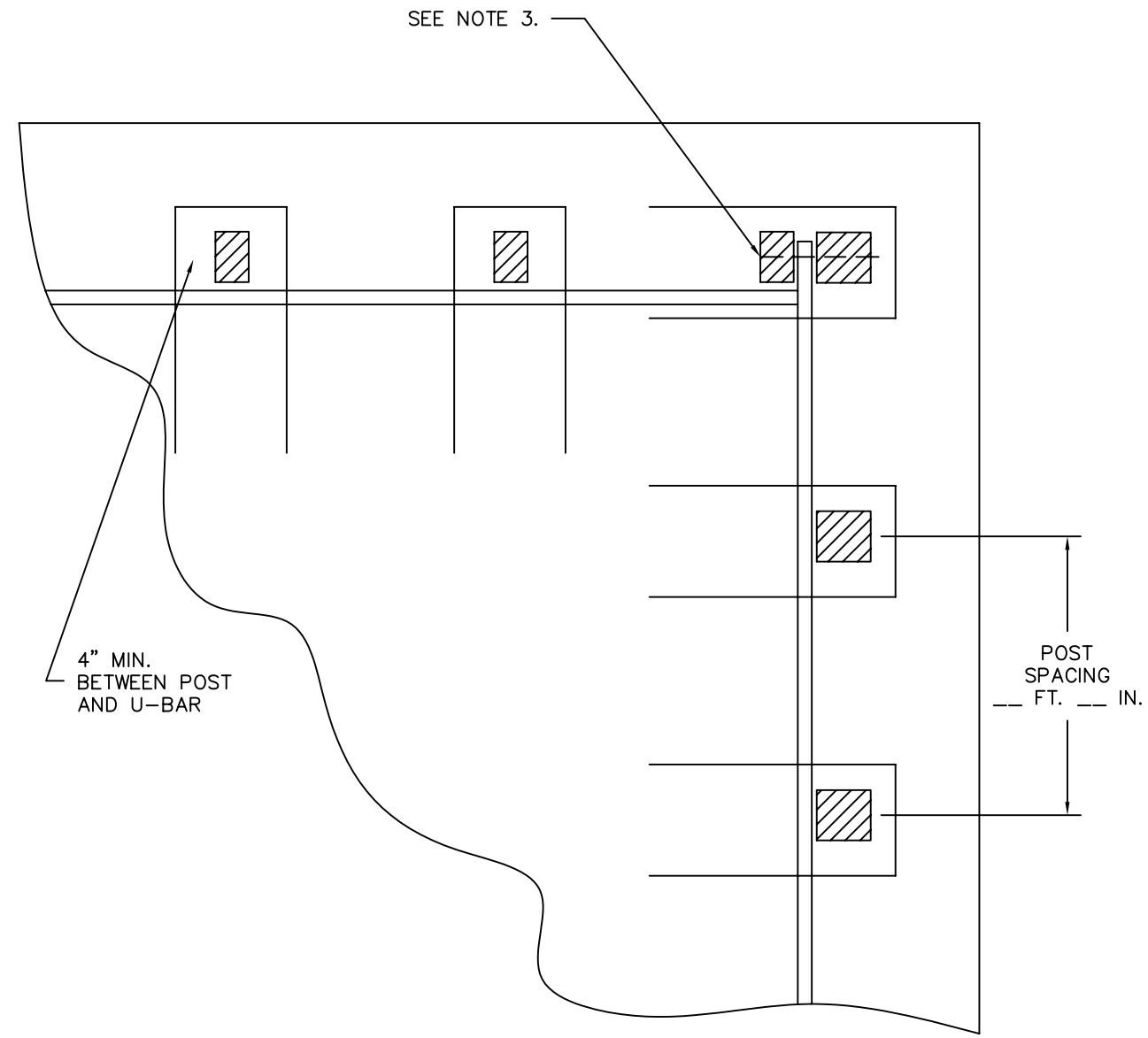

NOTES:

1. PLANK JOINTS SHALL BE STAGGERED ON THE POSTS.
2. ATTACH EACH PLANK TO EACH POST WITH 2 OR MORE 20D RING SHANK NAILS.
3. ATTACH NON-EMBEDDED CORNER POST TO ADJACENT POST WITH 1/2" BOLTS, WASHERS, & NUTS @ 10" CC; LOWEST BOLT @ 5" ABOVE FLOOR.
4. TIMBER SHALL BE S. YELLOW PINE, DOUGLAS-FIR, HEM-FIR, OR RED OAK.
5. A 12" MINIMUM CONCRETE COLLAR SHALL BE PLACED WHEN USING BEDDING TO BACKFILL THE POST HOLE.

NOT TO SCALE

Date

Designed

Drawn

Checked

Approved by

___COUNTY, PENNSYLVANIA

WOODEN WALL W/ FENCE

NRCS
Natural Resources Conservation Service
United States Department of Agriculture

File No.
PA-051.dwg

Drawing No.
PA-051

Sheet ___ of ___