This drawing is based on a design prepared by the MidWest Plan Service (MWPS) at Iowa State University. For more specific details concerning the design refer to MidWest Plan Service Publication TR-9, Circular Concrete Manure Tanks (March 1998). This drawing may be used for tanks which are above or below ground. The design is in accordance with ultimate strength design requirements detailed in ACI 318-05. Supplemental design and calculations performed by TeamAg Inc. Jan 2008.

Design Loading:

1. Manure load: 65 psf/ft. of depth. With a factor of safety = 1.2.
2. Soil backfill loads: 45 psf/ft. of depth with no surcharge and a factor of safety = 1.6.
   This requires the structure backfill to be adequately drained. To meet this requirement see backfill details on this sheet.
3. Required soil bearing pressure greater than 2000 psf.

Construction Notes:

1. Reinforcing steel for footing and walls shall have a tension yield point of fy = 60,000 psi. Refer to Sheet 2 for floor reinforcing steel grades.
2. For splice lengths refer to the table on Sheet 2. All bends in reinforcing steel shall have a minimum inside radius of 3 bar diameters.
3. All concrete shall have a minimum 28 day compressive strength of 4,000 psi. The mix design shall be submitted to NRCS prior to placement. Unless shown otherwise in the construction specifications, the following requirements shall apply:
   - Cement shall be Type I or Type II
   - Slump – 3–6" inches
   - Air content from 5 to 7 percent.
   - Aggregate size – maximum of 1 inch diameter.
   - Construction joints – cleaned prior to subsequent concrete placement.
   - Cure concrete for a minimum of 7 days – acceptable methods are:
     - membrane forming curing compound at rate of 1 gal/150 s.f.
     - leaving the forms in place
     - soaking / continuous spray
4. Construction joints may be used to ease construction. The location of construction joints shall be approved by the Engineer prior to placing the concrete.
5. Refer to manufacturers recommendation for placing waterstop material.
6. Backfill shall be brought up uniformly around the tank. The maximum difference in the finished backfill elevations around the tank shall be 4 feet.
7. All construction methods shall meet OSHA regulations.
8. Installation of this structure shall conform to NRCS Construction Specification 313.

Safety Considerations:

1. The tank shall be surrounded by a chain link or woven wire fence.(min 5' height)
2. Posts shall be attached to the wall or the posts shall be cast into the concrete wall, with an an 8" rebar welded to the base of the post. The posts must be capped at time of installation.
3. Gates and safety stops shall be installed at pushoff locations to prevent accidental entry of equipment, people and animals.
4. Warning signs shall be erected around the tank stating that entry may result in injury or death.

Vehicle Access

If heavy tank wagons, or trucks will be driven within a distance equal to the tank wall height from the edge of the tank, cast a 8 inch thick concrete slab along the traffic route by the tank. The concrete slab should be large enough to eliminate any wheel loads directly on the natural ground or backfill by the tank. The purpose of the slab is to distribute the loading along the tank wall and prevent mud and erosion.

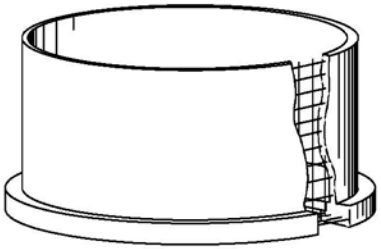

CIRCULAR CONCRETE MANURE TANK

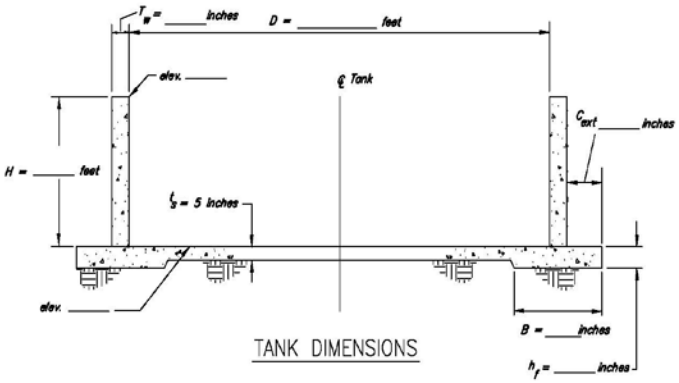

TANK DIMENSIONS

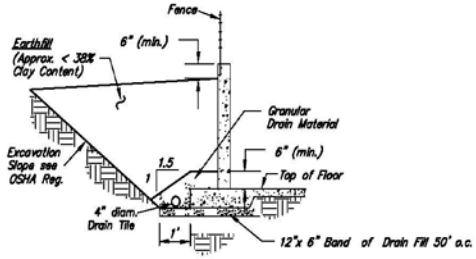

WALL BACKFILL DETAIL–TYPICAL

1. Provide a minimum 4 inch diameter perimeter drain tile for wall backfill drainage. Outlet the tile at a location downslope where flow from the outlet may be monitored. Provide heavy wall pipe where backfill cover is < 24". Provide an animal guard on all outlets.
2. If a high water table is present a special drain design will be required under the tank floor to prevent uplift.
3. To provide adequate drainage, the granular drain material shall be clean with maximum 5 percent fines. The maximum particle size shall be 1.5 inches.
4. Provide a 12"x6" band of granular drain material under the footing every 50' on center around the tank perimeter.
5. Provide Min. of 3' of backfill over top of footing for frost protection.

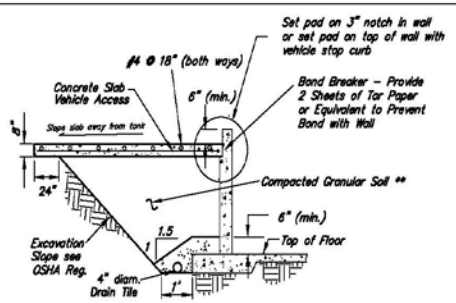

WALL BACKFILL DETAIL–VEHICLE ACCESS

** Granular back fill is required under slab and shall be compacted in uniform 8 inch lifts with a minimum of 3 passes with a manually directed vibratory roller or plate vibrator. Granular backfill shall be GP, GW, SP, SW, GM, GC or equal

1. Vehicle access slab is required if heavy tank wagons or loaded trucks are driven within a distance equal to the tank wall height from the edge of the tank.

2. Provide a 12"x6" band of granular drain material under the footing every 50' on center around the tank perimeter.

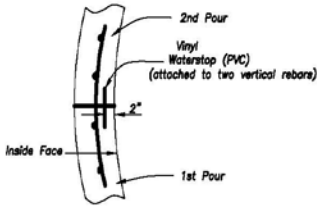

PLAN VIEW
TYPICAL WALL JOINT DETAIL

SPECIAL DESIGN NOTES:

1. For tank sizes not listed use the steel spacing & wall thickness from the next larger tank size.

2. Kicker walls can NOT be used on this tank design.

3. Depth Options are 8, 10, 12 & 14 feet.

4. Diameter range up to 200 feet.

5. Designed for even backfill +/–2 feet only.

Designed NRCS, MWPS, Pennsylvania Date 8/08
Drawn WAC, Works
Checked
Approved by

COUNTY, PENNSYLVANIA

PENNSYLVANIA ROUND TANK NR, PA083

NRCS
Natural Resources Conservation Service
United States Department of Agriculture

File No. PA-083.dwg
Drawing No. PA-083
Sheet 1 of 3

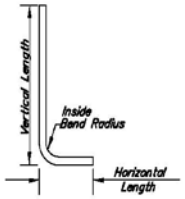

DOWEL BAR DIMENSIONS (A_{sd})

Bar Size	#4	#5
Vertical Length	26 in.	30 in.
Horizontal Length	10 in.	8 in.
Inside Bend Radius	1-1/2 in.	1-7/8 in.
Total Length	36 in.	38 in.

1. Use the same bar size as A_{sv}

DOWEL BAR CONFIGURATION

** NOTE: Dowel bars shall be the same size and spacing as A_{sv}

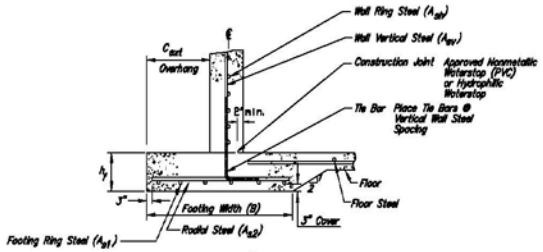

MONOLITHIC FOOTING/FLOOR PLACEMENT

WALL TO RING FOUNDATION DETAIL

FLOOR STEEL (A_s)

DISTANCE BETWEEN JOINTS *	FOR 5" THICK FLOOR	
	A_s	EXAMPLE
≤ 30'	.029	6X6-W1.4xW1.4 (10 ga.)
>30' ≤ 60'	.058	6x6-W2.9xW2.9 (6 ga.)
>60' ≤ 90'	.087	#3 @ 15"
>90' ≤ 140'	.12	#4 @ 18"
>140' ≤ 200'	.19	#4 @ 12"

This table is for floors on coarse granular or cohesive material. For floors on sand or pervious geotextile, A_s may be reduced 50%.

* See PA-004 and PA-063 for Joint details

FOOTING DIMENSION & STEEL (A_{s1} & A_{s2})

Wall Height H (ft)	Wall Thickness Tw (in)	Footing Width B (in)	Footing Depth h_f (in)	Over-hang C_{ext} (in)	Rebar Parallel To Wall Ring Steel A_{s1}	Rebar Perpendicular To Wall Radial Steel A_{s2}
8,10,12	8	20	12	6	3-#4 Rebar	Use #4 Rebar placed at Vertical Wall Steel (A_{sv}) spacing. For spacing greater than 9 inches use #5 bars, or #4 bars placed at ½ (A_{sv}) spacing.
8,10,12	10	24	12	7	3-#4 Rebar	
10	12	24	12	6	3-#4 Rebar	
12,14	12	30	12	8	3-#4 Rebar	

1. Required soil bearing pressure shall be at least 2,000 psi.
2. Place ring steel 3 inches above the footing bottom.
3. Place radial steel on top of ring steel.

SPLICING DETAIL FOR WALL AND FOOTING RING STEEL

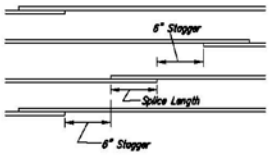

SPLICE LENGTHS FOR ALL BARS

Bar Size	Min. Splice Lengths
#3	18 inches
#4	25 inches
#5	32 inches
#6	38 inches

1. For single mat of rebar, ring steel shall be located along the wall centerline.
2. Place vertical steel on the outside of the ring steel.

DOUBLE REINFORCED CIRCULAR TANK WALL
(Not to Scale)

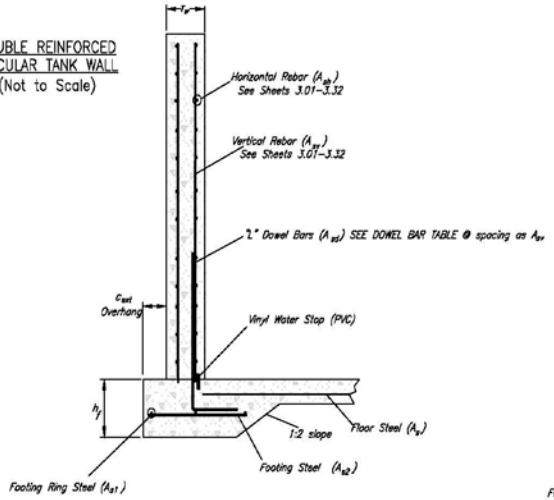

SINGLE REINFORCED CIRCULAR TANK WALL
(Not to Scale)

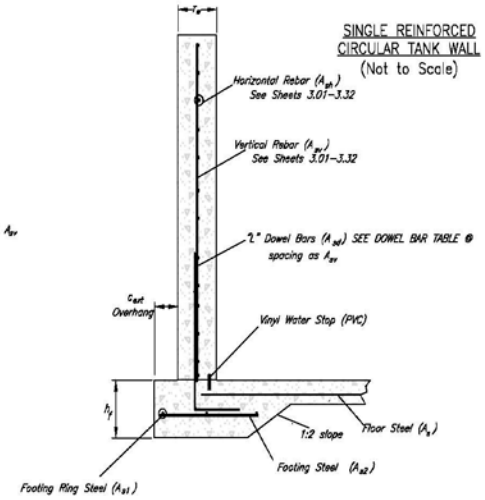

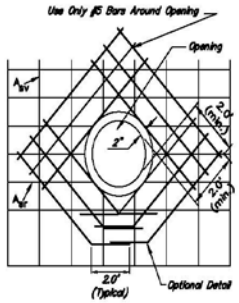

1. Cut all vertical and ring steel 2 inches from opening.
2. For each ring steel bar interrupted by the opening, install one #5 bar around each side of the opening. A minimum 2 - #5 bars are to be used along each side.
3. Bars spacing shall not be closer than 3 inches C - C and not farther apart than A_{sh} spacing.
4. Tie diagonal bars to dowels when pipe is near the floor.

DETAIL OF PIPE PROTRUDING THROUGH A WALL

Designed NRCS, NWFS, Pennsylvania Date 7/08
Drawn WAG, Harris Date 8/08
Checked
Approved by

COUNTY, PENNSYLVANIA

PENNSYLVANIA ROUND TANK NR, PA083- DETAILS

NRCS
Natural Resources Conservation Service
United States Department of Agriculture

File No. PA-083.dwg
Drawing No. PA-083
Sheet 2 of 3

Results for the 8'x40' circular tank:

Circular tank:

Tank Diameter = 40 ft
Tank Wall thickness = 8 in (actual)
Tank Height = 8 ft
f_y= 60,000 psi
f'_c = 4,000 psi

Horizontal Steel = #4 rebar = A_{sh}		
Bar #	Spacing (in)	Distance from finished floor (ft - in)
1	3	0' 3"
2	12	1' 3"
3	12	2' 3"
4	12	3' 3"
5	12	4' 3"
6	12	5' 3"
7	12	6' 3"
8	12	7' 3"
9	6	7' 9"

Vertical Steel shall be #4 @ 12" O.C. = A_{sv}
Dowels "L" bars shall be #4 @ 12" O.C. with a horizontal leg of 6" and a vertical leg of 26"

NRCS *Natural Resources Conservation Services* *United States Department of Agriculture*	_____ *County, PA* ***ROUND TANK DETAIL*** ***PA-083*** ***Page 3.01***	Designed *PA NRCS* *12/01* Drawn *Hartz* *11/14/08* Revisions *Pereverzoff* *1/9/08* Checked _____ Approved _____

Results for the 8'x60' circular tank:

Circular tank:

Tank Diameter = 60 ft
Tank Wall thickness = 8 in (actual)
Tank Height = 8 ft
f_y= 60,000 psi
f'_c = 4,000 psi

Horizontal Steel = #4 rebar = A_{sh}		
Bar #	Spacing (in)	Distance from finished floor (ft - in)
1	3	0' 3"
2	12	1' 3"
3	12	2' 3"
4	12	3' 3"
5	12	4' 3"
6	12	5' 3"
7	12	6' 3"
8	12	7' 3"
9	6	7' 9"

Vertical Steel shall be #4 @ 12" O.C. = A_{sv}
Dowels "L" bars shall be #4 @ 12" O.C. with a horizontal leg of 6" and a vertical leg of 26"

NRCS *Natural Resources Conservation Services* *United States Department of Agriculture*	_____ *County, PA* ***ROUND TANK DETAIL*** ***PA-083*** ***Page 3.02***	Designed *PA NRCS* *12/01* Drawn *Hartz* *11/14/08* Revisions *Pereverzoff* *1/9/08* Checked _____ Approved _____

Results for the 8'x80' circular tank:

Circular tank:

Tank Diameter = 80 ft
Tank Wall thickness = 8 in (actual)
Tank Height = 8 ft
f_y= 60,000 psi
f'_c = 4,000 psi

Horizontal Steel = #4 rebar = A_{sh}		
Bar #	Spacing (in)	Distance from finished floor (ft - in)
1	3	0' 3"
2	12	1' 3"
3	12	2' 3"
4	12	3' 3"
5	12	4' 3"
6	12	5' 3"
7	12	6' 3"
8	12	7' 3"
9	6	7' 9"

Vertical Steel shall be #4 @ 12" O.C. = A_{sv}
Dowels "L" bars shall be #4 @ 12" O.C. with a horizontal leg of 6" and a vertical leg of 26"

NRCS *Natural Resources Conservation Services* *United States Department of Agriculture*	_____ *County, PA* ***ROUND TANK DETAIL*** ***PA-083*** ***Page 3.03***	Designed *PA NRCS* *12/01* Drawn *Hartz* *11/14/08* Revisions *Pereverzoff* *1/9/08* Checked _____ Approved _____

Results for the 8'x100' circular tank:

Circular tank:

Tank Diameter = 100 ft
Tank Wall thickness = 8 in (actual)
Tank Height = 8 ft
f_y= 60,000 psi
f'_c = 4,000 psi

Horizontal Steel = #4 rebar = A_{sh}		
Bar #	Spacing (in)	Distance from finished floor (ft - in)
1	3	0' 3"
2	12	1' 3"
3	12	2' 3"
4	12	3' 3"
5	12	4' 3"
6	12	5' 3"
7	10	6' 1"
8	10	6' 11"
9	10	7' 9"

Vertical Steel shall be #4 @ 12" O.C. = A_{sv}
Dowels "L" bars shall be #4 @ 12" O.C. with a horizontal leg of 6" and a vertical leg of 26"

NRCS *Natural Resources Conservation Services* *United States Department of Agriculture*	_____ *County, PA* ***ROUND TANK DETAIL*** ***PA-083*** ***Page 3.04***	Designed *PA NRCS* *12/01* Drawn *Hartz* *11/14/08* Revisions *Pereverzoff* *1/9/08* Checked _____ Approved _____

Results for the 8'x120' circular tank:

Circular tank:

Tank Diameter = 120 ft
Tank Wall thickness = 8 in (actual)
Tank Height = 8 ft
f_y= 60,000 psi
f'_c = 4,000 psi

Horizontal Steel = #4 rebar = A_{sh}		
Bar #	Spacing (in)	Distance from finished floor (ft - in)
1	3	0' 3"
2	12	1' 3"
3	12	2' 3"
4	10	3' 1"
5	10	3' 11"
6	10	4' 9"
7	9	5' 6"
8	9	6' 3"
9	9	7' 0"
10	9	7' 9"

Vertical Steel = #4 @ 12" O.C. = A_{sv}
Dowels "L" bars from tank to footing shall be #4 @ 12" O.C. 26" vertical leg, 6" horizontal leg

NRCS *Natural Resources Conservation Services* *United States Department of Agriculture*	_____ *County, PA* ***ROUND TANK DETAIL*** ***PA-083*** ***Page 3.05***	Designed *PA NRCS* *12/01* Drawn *Hartz* *11/14/08* Revisions *Pereverzoff* *1/9/08* Checked _____ Approved _____

Results for the 8'x140' circular tank:

Circular tank:

Tank Diameter = 140 ft
Tank Wall thickness = 10 in (actual)
Tank Height = 8 ft
f_y= 60,000 psi
f'_c = 4,000 psi

Horizontal Steel = #4 rebar = A_{sh}		
Bar #	Spacing (in)	Distance from finished floor (ft - in)
1	3	0' 3"
2	12	1' 3"
3	12	2' 3"
4	10	3' 1"
5	10	3' 11"
6	8	4' 7"
7	8	5' 3"
8	6	5' 9"
9	6	6' 3"
10	6	6' 9"
11	6	7' 3"
12	6	7' 9"

Vertical Steel = #4 @ 12" O.C. = A_{sv}
Dowels "L" bars from tank to footing shall be #4 @ 12" O.C. 26" vertical leg, 8" horizontal leg

NRCS *Natural Resources Conservation Services* *United States Department of Agriculture*	_____ *County, PA* ***ROUND TANK DETAIL*** ***PA-083*** ***Page 3.06***	Designed *PA NRCS* *12/01* Drawn *Hartz* *11/14/08* Revisions *Pereverzoff* *1/9/08* Checked _____ Approved _____

Results for the 8'x160' circular tank:

Circular tank:

Tank Diameter = 160 ft
Tank Wall thickness = 10 in (actual)
Tank Height = 8 ft
f_y= 60,000 psi
f'_c = 4,000 psi

Horizontal Steel = #4 rebar = A_{sh}		
Bar #	Spacing (in)	Distance from finished floor (ft - in)
1	3	0' 3"
2	12	1' 3"
3	10	2' 1"
4	10	2' 11"
5	8	3' 7"
6	8	4' 3"
7	6	4' 9"
8	6	5' 3"
9	6	5' 9"
10	6	6' 3"
11	6	6' 9"
12	6	7' 3"
13	6	7' 9"

Vertical Steel = #4 @ 12" O.C. = A_{sv}
Dowels "L" bars from tank to footing shall be #4 @ 12" O.C. 26" vertical leg, 8" horizontal leg

NRCS *Natural Resources Conservation Services* *United States Department of Agriculture*	_____ *County, PA* ***ROUND TANK DETAIL*** ***PA-083*** ***Page 3.07***	Designed *PA NRCS* *12/01* Drawn *Hartz* *11/14/08* Revisions *Pereverzoff* *1/9/08* Checked _____ Approved _____

Results for the 8'x180' circular tank:

Circular tank:

Tank Diameter = 180 ft
Tank Wall thickness = 10 in (actual)
Tank Height = 8 ft
f_y= 60,000 psi
f'_c = 4,000 psi

Horizontal Steel = #5 rebar = A_{sh}		
Bar #	Spacing (in)	Distance from finished floor (ft - in)
1	3	0' 3"
2	12	1' 3"
3	12	2' 3"
4	12	3' 3"
5	10	4' 1"
6	10	4' 11"
7	10	5' 9"
8	8	6' 5"
9	8	7' 1"
10	8	7' 9"

Vertical Steel = #4 @ 12" O.C. = A_{sv}
Dowels "L" bars from tank to footing shall be #4 @ 12" O.C. 26" vertical leg, 8" horizontal leg

NRCS Natural Resources Conservation Services United States Department of Agriculture	_____ County, PA ROUND TANK DETAIL PA-083 Page 3.08	Designed PA NRCS 12/01 Drawn Hartz 11/14/08 Revisions Pereverzoff 1/9/08 Checked _____ Approved _____

Results for the 8'x200' circular tank:

Circular tank:

Tank Diameter = 200 ft
Tank Wall thickness = 12 in (actual)
Tank Height = 8 ft
f_y= 60,000 psi
f'_c = 4,000 psi

Horizontal Steel = #4 rebar = A_{sh} Steel shown in table must be placed in each face of the wall		
Bar #	Spacing (in)	Distance from finished floor (ft - in)
1	3	0' 3"
2	12	1' 3"
3	12	2' 3"
4	12	3' 3"
5	12	4' 3"
6	12	5' 3"
7	8	5' 11"
8	8	6' 7"
9	8	7' 3"
10	6	7' 9"

Vertical Steel = #4 @ 12" O.C. in each face. = A_{sv}
Dowels "L" bars from tank to footing shall be #4 @ 12" O.C. at the interior mat of steel.
26" vertical leg, 6" horizontal leg

NRCS *Natural Resources Conservation Services* *United States Department of Agriculture*	_____ *County, PA* ***ROUND TANK DETAIL*** ***PA-083*** ***Page 3.09***	Designed *PA NRCS* *12/01* Drawn *Hartz* *11/14/08* Revisions *Pereverzoff* *1/9/08* Checked _____ Approved _____

Results for the 10'x40' circular tank:

Circular tank:

Tank Diameter = 40 ft
Tank Wall thickness = 8 in (actual)
Tank Height = 10 ft
f_y= 60,000 psi
f'_c = 4,000 psi

Horizontal Steel = #4 rebar = A_{sh}		
Bar #	Spacing (in)	Distance from finished floor (ft - in)
1	3	0' 3"
2	12	1' 3"
3	12	2' 3"
4	12	3' 3"
5	12	4' 3"
6	12	5' 3"
7	12	6' 3"
8	12	7' 3"
9	12	8' 3"
10	12	9' 3"
11	6	9' 9"

Vertical Steel shall be #4 @ 12" O.C. = A_{sv}
Dowels "L" bars shall be #4 @ 12" O.C. with a horizontal leg of 6" and a vertical leg of 26"

NRCS Natural Resources Conservation Services United States Department of Agriculture	_____ County, PA ROUND TANK DETAIL PA-083 Page 3.10	Designed PA NRCS 12/01 Drawn Hartz 11/14/08 Revisions Pereverzoff 1/9/08 Checked _____ Approved _____

Results for the 10'x60' circular tank:

Circular tank:

Tank Diameter = 60 ft
Tank Wall thickness = 8 in (actual)
Tank Height = 10 ft
f_y= 60,000 psi
f'_c = 4,000 psi

Horizontal Steel = #4 rebar = A_{sh}		
Bar #	Spacing (in)	Distance from finished floor (ft - in)
1	3	0' 3"
2	12	1' 3"
3	10	2' 1"
4	10	2' 11"
5	10	3' 9"
6	10	4' 7"
7	10	5' 5"
8	10	6' 3"
9	12	7' 3"
10	12	8' 3"
11	12	9' 3"
12	6	9' 9"

Vertical Steel shall be #4 @ 12" O.C. = A_{sv}
Dowels "L" bars shall be #4 @ 12" O.C. with a horizontal leg of 6" and a vertical leg of 26"

NRCS *Natural Resources Conservation Services* *United States Department of Agriculture*	_____ *County, PA* ***ROUND TANK DETAIL*** ***PA-083*** ***Page 3.11***	Designed *PA NRCS* *12/01* Drawn *Hartz* *8/14/08* Revisions *Pereverzoff* *1/9/08* Checked _____ Approved _____

Results for the 10'x80' circular tank:

Circular tank:

Tank Diameter = 80 ft
Tank Wall thickness = 8 in (actual)
Tank Height = 10 ft
f_y= 60,000 psi
f'_c = 4,000 psi

Horizontal Steel = #4 rebar = A_{sh}		
Bar #	Spacing (in)	Distance from finished floor (ft - in)
1	3	0' 3"
2	10	1' 1"
3	10	1' 11"
4	10	2' 9"
5	9	3' 6"
6	9	4' 3"
7	9	5' 0"
8	9	5' 9"
9	10	6' 7"
10	10	7' 5"
11	10	8' 3"
12	10	9' 1"
13	8	9' 9"

Vertical Steel shall be #4 @ 12" O.C. = A_{sv}
Dowels "L" bars shall be #4 @ 12" O.C. with a horizontal leg of 6" and a vertical leg of 26"

NRCS *Natural Resources Conservation Services* *United States Department of Agriculture*	_____ *County, PA* ***ROUND TANK DETAIL*** ***PA-083*** ***Page 3.12***	Designed *PA NRCS* *12/01* Drawn *Hartz* *8/14/08* Revisions *Pereverzoff* *1/9/08* Checked _____ Approved _____

Results for the 10'x100' circular tank:

Circular tank:

Tank Diameter = 100 ft
Tank Wall thickness = 10 in (actual)
Tank Height = 10 ft
f_y= 60,000 psi
f'_c = 4,000 psi

Horizontal Steel = #4 rebar = A_{sh}		
Bar #	Spacing (in)	Distance from finished floor (ft - in)
1	3	0' 3"
2	10	1' 1"
3	10	1' 11"
4	10	2' 9"
5	8	3' 5"
6	8	4' 1"
7	8	4' 9"
8	8	5' 5"
9	8	6' 1"
10	8	6' 9"
11	8	7' 5"
12	8	8' 1"
13	10	8' 11"
13	10	9' 9"

Vertical Steel shall be #4 @ 10" O.C. = A_{sv}
Dowels "L" bars shall be #4 @ 10" O.C. with a horizontal leg of 8" and a vertical leg of 26"

NRCS Natural Resources Conservation Services United States Department of Agriculture	_____ County, PA ROUND TANK DETAIL PA-083 Page 3.13	Designed PA NRCS 12/01 Drawn Hartz 8/14/08 Revisions Pereverzoff 1/9/08 Checked _____ Approved _____

Results for the 10'x120' circular tank:

Circular tank:

Tank Diameter = 120 ft
Tank Wall thickness = 10 in (actual)
Tank Height = 10 ft
f_y= 60,000 psi
f'_c = 4,000 psi

Horizontal Steel = #4 rebar = A_{sh}		
Bar #	Spacing (in)	Distance from finished floor (ft - in)
1	3	0' 3"
2	12	1' 3"
3	10	2' 1"
4	8	2' 9"
5	8	3' 5"
6	8	4' 1"
7	8	4' 9"
8	8	5' 5"
9	8	6' 1"
10	8	6' 9"
11	6	7' 3"
12	6	7' 9"
13	6	8' 3"
14	6	8' 9"
15	6	9' 3"
16	6	9' 9"

Vertical Steel = #4 @ 10" O.C. = A_{sv}
Dowels "L" bars from tank to footing shall be #4 @ 10" O.C. 26" vertical leg, 8" horizontal leg

NRCS Natural Resources Conservation Services United States Department of Agriculture	_____ County, PA ROUND TANK DETAIL PA-083 Page 3.14	Designed PA NRCS 12/01 Drawn Hartz 8/14/08 Revisions Pereverzoff 1/9/08 Checked _____ Approved _____

Results for the 10'x140' circular tank:

Circular tank:

Tank Diameter = 140 ft
Tank Wall thickness = 10 in (actual)
Tank Height = 10 ft
f_y= 60,000 psi
f'_c = 4,000 psi

Horizontal Steel = #5 rebar = A_{sh}		
Bar #	Spacing (in)	Distance from finished floor (ft - in)
1	3	0' 3"
2	12	1' 3"
3	12	2' 3"
4	12	3' 3"
5	12	4' 3"
6	10	5' 1"
7	10	5' 11"
8	10	6' 9"
9	10	7' 7"
10	10	8' 5"
11	9	9' 2"
12	7	9' 9"

Vertical Steel = #4 @ 10" O.C. = A_{sv}
Dowels "L" bars from tank to footing shall be #4 @ 10" O.C. 26" vertical leg, 8" horizontal leg

NRCS *Natural Resources Conservation Services* *United States Department of Agriculture*	_____ *County, PA* ***ROUND TANK DETAIL*** ***PA-083*** ***Page 3.15***	Designed *PA NRCS* *12/01* Drawn *Hartz* *8/14/08* Revisions *Pereverzoff* *1/9/08* Checked _____ Approved _____

Results for the 10'x160' circular tank:

Circular tank:

Tank Diameter = 160 ft
Tank Wall thickness = 10 in (actual)
Tank Height = 10 ft
f_y= 60,000 psi
f'_c = 4,000 psi

Horizontal Steel = #5 rebar = A_{sh}		
Bar #	Spacing (in)	Distance from finished floor (ft - in)
1	3	0' 3"
2	12	1' 3"
3	12	2' 3"
4	12	3' 3"
5	10	4' 1"
6	10	4' 11"
7	10	5' 9"
8	8	6' 5"
9	8	7' 1"
10	8	7' 9"
11	8	8' 5"
12	8	9' 1"
13	8	9' 9"

Vertical Steel = #4 @ 10" O.C. = A_{sv}
Dowels "L" bars from tank to footing shall be #4 @ 10" O.C. 26" vertical leg, 8" horizontal leg

NRCS Natural Resources Conservation Services United States Department of Agriculture	_____ County, PA ROUND TANK DETAIL PA-083 Page 3.16	Designed PA NRCS 12/01 Drawn Hartz 8/14/08 Revisions Pereverzoff 1/9/08 Checked _____ Approved _____

Results for the 10'x180' circular tank:

Circular tank:

Tank Diameter = 180 ft
Tank Wall thickness = 10 in (actual)
Tank Height = 10 ft
f_y= 60,000 psi
f'_c = 4,000 psi

Horizontal Steel = #5 rebar = A_{sh}		
Bar #	Spacing (in)	Distance from finished floor (ft - in)
1	3	0' 3"
2	12	1' 3"
3	12	2' 3"
4	10	3' 1"
5	10	3' 11"
6	8	4' 7"
7	8	5' 3"
8	8	5' 11"
9	8	6' 7"
10	8	7' 3"
11	6	7' 9"
12	6	8' 3"
13	6	8' 9"
14	6	9' 3"
15	6	9' 9"

Vertical Steel = #4 @ 9" O.C. = A_{sv}
Dowels "L" bars from tank to footing shall be #4 @ 9" O.C. 26" vertical leg, 8" horizontal leg

NRCS Natural Resources Conservation Services United States Department of Agriculture	_____ County, PA ROUND TANK DETAIL PA-083 Page 3.17	Designed PA NRCS 12/01 Drawn Hartz 8/14/08 Revisions Pereverzoff 1/9/08 Checked _____ Approved _____

Results for the 10'x200' circular tank:

Circular tank:

Tank Diameter = 200 ft
Tank Wall thickness = 12 in (actual)
Tank Height = 10 ft
f_y= 60,000 psi
f'_c = 4,000 psi

Horizontal Steel = #4 rebar = A_{sh} Steel shown in table must be placed in each face of the wall		
Bar #	Spacing (in)	Distance from finished floor (ft - in)
1	3	0' 3"
2	12	1' 3"
3	12	2' 3"
4	12	3' 3"
5	10	4' 1"
6	10	4' 11"
7	10	5' 9"
8	10	6' 7"
9	8	7' 3"
10	8	7' 11"
11	8	8' 7"
12	8	9' 3"
13	6	9' 9"

Vertical Steel = #4 @ 12" O.C. in each face. = A_{sv}
Dowels "L" bars from tank to footing shall be #4 @ 12" O.C. at the interior mat of steel. 26" vertical leg, 8" horizontal leg

NRCS Natural Resources Conservation Services United States Department of Agriculture	_____ County, PA ROUND TANK DETAIL PA-083 Page 3.18	Designed PA NRCS 12/01 Drawn Hartz 8/14/08 Revisions Pereverzoff 1/9/08 Checked _____ Approved _____

Results for the 12'x40' circular tank:

Circular tank:

Tank Diameter = 40 ft
Tank Wall thickness = 8 in (actual)
Tank Height = 12 ft
f_y= 60,000 psi
f'_c = 4,000 psi

Horizontal Steel = #4 rebar = A_{sh}		
Bar #	Spacing (in)	Distance from finished floor (ft - in)
1	3	0' 3"
2	12	1' 3"
3	12	2' 3"
4	10	3' 1"
5	10	3' 11"
6	10	4' 9"
7	10	5' 7"
8	10	6' 5"
9	10	7' 3"
10	12	8' 3"
11	12	9' 3"
12	12	10' 3"
13	12	11' 3"
14	6	11' 9"

Vertical Steel shall be #4 @ 12" O.C. = A_{sv}
Dowels "L" bars shall be #4 @ 12" O.C. with a horizontal leg of 6" and a vertical leg of 26"

NRCS *Natural Resources Conservation Services* *United States Department of Agriculture*	_____ *County, PA* ***ROUND TANK DETAIL*** ***PA-083*** ***Page 3.19***	Designed *PA NRCS* *12/01* Drawn *Hartz* *8/14/08* Revisions *Pereverzoff* *1/9/08* Checked _____ Approved _____

Results for the 12'x60' circular tank:

Circular tank:

Tank Diameter = 60 ft
Tank Wall thickness = 10 in (actual)
Tank Height = 12 ft
f_y= 60,000 psi
f'_c = 4,000 psi

Horizontal Steel = #4 rebar = A_{sh}		
Bar #	Spacing (in)	Distance from finished floor (ft - in)
1	3	0' 3"
2	12	1' 3"
3	10	2' 1"
4	10	2' 11"
5	9	3' 8"
6	9	4' 5"
7	9	5' 2"
8	9	5' 11"
9	9	6' 8"
10	10	7' 6"
11	10	8' 4"
12	12	9' 4"
13	12	10' 4"
14	12	11' 4"
15	5	11' 9"

Vertical Steel = #4 @ 10" O.C. = A_{sv}
Dowels "L" bars shall be #4 @ 10" O.C. with a horizontal leg of 8" and a vertical leg of 26"

NRCS Natural Resources Conservation Services United States Department of Agriculture	_____ County, PA ROUND TANK DETAIL PA-083 Page 3.20	Designed PA NRCS 12/01 Drawn Hartz 8/14/08 Revisions Pereverzoff 1/9/08 Checked _____ Approved _____

Results for the 12'x80' circular tank:

Circular tank:

Tank Diameter = 80 ft
Tank Wall thickness = 10 in (actual)
Tank Height = 12 ft
f_y= 60,000 psi
f'_c = 4,000 psi

Horizontal Steel = #4 rebar = A_{sh}		
Bar #	Spacing (in)	Distance from finished floor (ft - in)
1	3	0' 3"
2	10	1' 1"
3	10	1' 11"
4	8	2' 7"
5	8	3' 3"
6	8	3' 11"
7	8	4' 7"
8	6	5' 1"
9	6	5' 7"
10	6	6' 1"
11	6	6' 7"
12	6	7' 1"
13	8	7' 9"
14	8	8' 5"
15	10	9' 3"
16	10	10' 1"
17	10	10' 11"
18	10	11' 9"

Vertical Steel shall be #4 @ 9" O.C. = A_{sv}
Dowels "L" bars shall be #4 @ 9" O.C. with a horizontal leg of 8" and a vertical leg of 26"

NRCS *Natural Resources Conservation Services* *United States Department of Agriculture*	_____ *County, PA* ***ROUND TANK DETAIL*** ***PA-083*** ***Page 3.21***	Designed *PA NRCS* *12/01* Drawn *Hartz* *8/14/08* Revisions *Pereverzoff* *1/9/08* Checked _____ Approved _____

Results for the 12'x100' circular tank:

Circular tank:

Tank Diameter = 100 ft
Tank Wall thickness = 10 in (actual)
Tank Height = 12 ft
f_y= 60,000 psi
f'_c = 4,000 psi

Horizontal Steel = #5 rebar = A_{sh}		
Bar #	Spacing (in)	Distance from finished floor (ft - in)
1	3	0' 3"
2	12	1' 3"
3	12	2' 3"
4	10	3' 1"
5	10	3' 11"
6	10	4' 9"
7	10	5' 7"
8	10	6' 5"
9	10	7' 3"
10	10	8' 1"
11	10	8' 11"
12	10	9' 9"
13	12	10' 9"
14	12	11' 9"

Vertical Steel shall be #4 @ 8" O.C. = A_{sv}
Dowels "L" bars shall be #4 @ 8" O.C. with a horizontal leg of 8" and a vertical leg of 26"

NRCS *Natural Resources Conservation Services* *United States Department of Agriculture*	_____ *County, PA* ***ROUND TANK DETAIL*** ***PA-083*** ***Page 3.22***	Designed *PA NRCS* *12/01* Drawn *Hartz* *8/14/08* Revisions *Pereverzoff* *1/9/08* Checked _____ Approved _____

Results for the 12'x120' circular tank:

Circular tank:

Tank Diameter = 120 ft
Tank Wall thickness = 10 in (actual)
Tank Height = 12 ft
f_y= 60,000 psi
f'_c = 4,000 psi

Horizontal Steel = #5 rebar = A_{sh}		
Bar #	Spacing (in)	Distance from finished floor (ft - in)
1	3	0' 3"
2	12	1' 3"
3	10	2' 1"
4	10	2' 11"
5	10	3' 9"
6	8	4' 5"
7	8	5' 1"
8	8	5' 9"
9	8	6' 5"
10	8	7' 1"
11	8	7' 9"
12	8	8' 5"
13	10	9' 3"
14	10	10' 1"
15	10	10' 11"
16	10	11' 9"

Vertical Steel = #5 @ 10" O.C. = A_{sv}
Dowels "L" bars from tank to footing shall be #5 @ 10" O.C. 30" vertical leg, 8" horizontal leg

NRCS *Natural Resources Conservation Services* *United States Department of Agriculture*	_____ *County, PA* ***ROUND TANK DETAIL*** ***PA-083*** ***Page 3.23***	Designed *PA NRCS* *12/01* Drawn *Hartz* *8/14/08* Revisions *Pereverzoff* *1/9/08* Checked _____ Approved _____

Results for the 12'x140' circular tank:

Circular tank:

Tank Diameter = 140 ft
Tank Wall thickness = 10 in (actual)
Tank Height = 12 ft
f_y= 60,000 psi
f'_c = 4,000 psi

Horizontal Steel = #5 rebar = A_{sh}		
Bar #	Spacing (in)	Distance from finished floor (ft - in)
1	3	0' 3"
2	12	1' 3"
3	12	2' 3"
4	10	3' 1"
5	8	3' 9"
6	8	4' 5"
7	8	5' 1"
8	8	5' 9"
9	8	6' 5"
10	8	7' 1"
11	8	7' 9"
12	8	8' 5"
13	8	9' 1"
14	8	9' 9"
15	8	10' 5"
16	8	11' 1"
17	8	11' 9"

Vertical Steel = #5 @ 10" O.C. = A_{sv}
Dowels "L" bars from tank to footing shall be #5 @ 10" O.C. 30" vertical leg, 8" horizontal leg

NRCS Natural Resources Conservation Services United States Department of Agriculture	_____ County, PA ROUND TANK DETAIL PA-083 Page 3.24	Designed PA NRCS 12/01 Drawn Hartz 8/14/08 Revisions Pereverzoff 1/9/08 Checked _____ Approved _____

Results for the 12'x160' circular tank:

Circular tank:

Tank Diameter = 160 ft
Tank Wall thickness = 12 in (actual)
Tank Height = 12 ft
f_y= 60,000 psi
f'_c = 4,000 psi

Horizontal Steel = #4 rebar = A_{sh} Steel shown in table must be placed in each face of the wall		
Bar #	Spacing (in)	Distance from finished floor (ft - in)
1	3	0' 3"
2	12	1' 3"
3	12	2' 3"
4	10	3' 1"
5	10	3' 11"
6	10	4' 9"
7	10	5' 7"
8	10	6' 5"
9	10	7' 3"
10	9	8' 0"
11	9	8' 9"
12	9	9' 6"
13	9	10' 3"
14	9	11' 0"
15	9	11' 9"

Vertical Steel = #4 @ 12" O.C. in each face. = A_{sv}
Dowels "L" bars from tank to footing shall be #4 @ 12" O.C. at the interior mat of steel. 26" vertical leg, 10" horizontal leg

NRCS Natural Resources Conservation Services United States Department of Agriculture	_____ County, PA ROUND TANK DETAIL PA-083 Page 3.25	Designed PA NRCS 12/01 Drawn Hartz 8/14/08 Revisions Pereverzoff 1/9/08 Checked _____ Approved _____

Results for the 12'x180' circular tank:

Circular tank:

Tank Diameter = 180 ft
Tank Wall thickness = 12 in (actual)
Tank Height = 12 ft
f_y= 60,000 psi
f'_c = 4,000 psi

Horizontal Steel = #4 rebar = A_{sh} Steel shown in table must be placed in each face of the wall		
Bar #	Spacing (in)	Distance from finished floor (ft - in)
1	3	0' 3"
2	10	1' 1"
3	10	1' 11"
4	10	2' 9"
5	10	3' 7"
6	10	4' 5"
7	8	5' 1"
8	8	5' 9"
9	8	6' 5"
10	8	7' 1"
11	8	7' 9"
12	8	8' 5"
13	8	9' 1"
14	8	9' 9"
15	8	10' 5"
16	8	11' 1"
17	8	11' 9"

Vertical Steel = #4 @ 12" O.C. in each face. = A_{sv}
Dowels "L" bars from tank to footing shall be #4 @ 12" O.C. at the interior mat of steel. 26" vertical leg, 10" horizontal leg

Results for the 12'x200' circular tank:

Circular tank:

Tank Diameter = 200 ft
Tank Wall thickness = 12 in (actual)
Tank Height = 12 ft
f_y= 60,000 psi
f'_c = 4,000 psi

Horizontal Steel = #5 rebar = A_{sh} Steel shown in table must be placed in each face of the wall		
Bar #	Spacing (in)	Distance from finished floor (ft - in)
1	3	0' 3"
2	14	1' 5"
3	12	2' 5"
4	12	3' 5"
5	12	4' 5"
6	12	5' 5"
7	12	6' 5"
8	12	7' 5"
9	12	8' 5"
10	10	9' 3"
11	10	10' 1"
12	10	10' 11"
13	10	11' 9"

Vertical Steel = #4 @ 12" O.C. in each face. = A_{sv}
Dowels "L" bars from tank to footing shall be #4 @ 12" O.C. at the interior mat of steel. 26" vertical leg, 10" horizontal leg

Results for the 14'x120' circular tank:

Circular tank:

Tank Diameter = 120 ft
Tank Wall thickness = 10 in (actual)
Tank Height = 14 ft
f_y= 60,000 psi
f'_c = 4,000 psi

Horizontal Steel = #5 rebar = A_{sh}		
Bar #	Spacing (in)	Distance from finished floor (ft - in)
1	3	0' 3"
2	10	1' 1"
3	10	1' 11"
4	8	2' 7"
5	8	3' 3"
6	6	3' 9"
7	6	4' 3"
8	6	4' 9"
9	6	5' 3"
10	6	5' 9"
11	6	6' 3"
12	6	6' 9"
13	6	7' 3"
14	6	7' 9"
15	6	8' 3"
16	6	8' 9"
17	8	9' 5"
18	8	10' 1"
19	8	10' 9"
20	10	11' 7"
21	10	12' 5"
22	10	13' 3"
23	6	13' 9"

Vertical Steel = #5 @ 8" O.C. = A_{sv}
Dowels "L" bars from tank to footing shall be #5 @ 8" O.C. 30" vertical leg, 8" horizontal leg

NRCS *Natural Resources Conservation Services* *United States Department of Agriculture*	_____ *County, PA* ***ROUND TANK DETAIL*** ***PA-083*** ***Page 3.28***	Designed *PA NRCS* *12/01* Drawn *Hartz* *8/14/08* Revisions *Pereverzoff* *1/9/08* Checked _____ Approved _____

Results for the 14'x140' circular tank:

Circular tank:

Tank Diameter = 140 ft
Tank Wall thickness = 12 in (actual)
Tank Height = 14 ft
f_y= 60,000 psi
f'_c = 4,000 psi

Horizontal Steel = #4 rebar = A_{sh} Steel shown in table must be placed in each face of the wall		
Bar #	Spacing (in)	Distance from finished floor (ft - in)
1	3	0' 3"
2	12	1' 3"
3	12	2' 3"
4	12	3' 3"
5	10	4' 1"
6	10	4' 11"
7	8	5' 7"
8	8	6' 3"
9	8	6' 11"
10	8	7' 7"
11	8	8' 3"
12	8	8' 11"
13	8	9' 7"
14	8	10' 3"
15	10	11' 1"
16	10	11' 11"
17	10	12' 9"
18	12	13' 9"

Vertical Steel = #4 @ 12" O.C. in each face. = A_{sv}
Dowels "L" bars from tank to footing shall be #4 @ 12" O.C. at the interior mat of steel. 26" vertical leg, 10" horizontal leg

NRCS Natural Resources Conservation Services United States Department of Agriculture	_____ County, PA ROUND TANK DETAIL PA-083 Page 3.29	Designed PA NRCS 12/01 Drawn Hartz 8/14/08 Revisions Pereverzoff 1/9/08 Checked _____ Approved _____

Results for the 14'x160' circular tank:

Circular tank:

Tank Diameter = 160 ft
Tank Wall thickness = 12 in (actual)
Tank Height = 14 ft
f_y= 60,000 psi
f'_c = 4,000 psi

Horizontal Steel = #4 rebar = A_{sh} Steel shown in table must be placed in each face of the wall		
Bar #	Spacing (in)	Distance from finished floor (ft - in)
1	3	0' 3"
2	10	1' 1"
3	10	1' 11"
4	10	2' 9"
5	9	3' 6"
6	9	4' 3"
7	9	5' 0"
8	9	5' 9"
9	8	6' 5"
10	8	7' 1"
11	8	7' 9"
12	8	8' 5"
13	8	9' 1"
14	8	9' 9"
15	8	10' 5"
16	8	11' 1"
17	8	11' 9"
18	8	12' 5"
19	8	13' 1"
20	8	13' 9"

Vertical Steel = #4 @ 10" O.C. in each face. = A_{sv}
Dowels "L" bars from tank to footing shall be #4 @ 10" O.C. at the interior mat of steel. 26" vertical leg, 10" horizontal leg

NRCS Natural Resources Conservation Services United States Department of Agriculture	_____ County, PA ROUND TANK DETAIL PA-083 Page 3.30	Designed PA NRCS 12/01 Drawn Hartz 8/14/08 Revisions Pereverzoff 1/9/08 Checked _____ Approved _____

Results for the 14'x180' circular tank:

Circular tank:

Tank Diameter = 180 ft
Tank Wall thickness = 12 in (actual)
Tank Height = 14 ft
f_y= 60,000 psi
f'_c = 4,000 psi

Horizontal Steel = #4 rebar = A_{sh} Steel shown in table must be placed in each face of the wall		
Bar #	Spacing (in)	Distance from finished floor (ft - in)
1	3	0' 3"
2	12	1' 3"
3	12	2' 3"
4	10	3' 1"
5	10	3' 11"
6	8	4' 7"
7	8	5' 3"
8	8	5' 11"
9	8	6' 7"
10	8	7' 3"
11	6	7' 9"
12	6	8' 3"
13	6	8' 9"
14	6	9' 3"
15	6	9' 9"
16	6	10' 3"
17	6	10' 9"
18	6	11' 3"
19	6	11' 9"
20	6	12' 3"
21	6	12' 9"
22	6	13' 3"
23	6	13' 9"

Vertical Steel = #4 @ 9" O.C. in each face. = A_{sv}
Dowels "L" bars from tank to footing shall be #4 @ 9" O.C. at the interior mat of steel. 26" vertical leg, 10" horizontal leg

NRCS Natural Resources Conservation Services United States Department of Agriculture	_____ County, PA ROUND TANK DETAIL PA-083 Page 3.31	Designed PA NRCS 12/01 Drawn Hartz 8/14/08 Revisions Pereverzoff 1/9/08 Checked _____ Approved _____

Results for the 14'x200' circular tank:

Circular tank:

Tank Diameter = 200 ft
Tank Wall thickness = 12 in (actual)
Tank Height = 14 ft
f_y= 60,000 psi
f'_c = 4,000 psi

Horizontal Steel = #5 rebar = A_{sh} Steel shown in table must be placed in each face of the wall		
Bar #	Spacing (in)	Distance from finished floor (ft - in)
1	3	0' 3"
2	18	1' 9"
3	18	3' 3"
4	12	4' 3"
5	12	5' 3"
6	12	6' 3"
7	10	7' 1"
8	10	7' 11"
9	10	8' 9"
10	10	9' 7"
11	10	10' 5"
12	10	11' 3"
13	10	12' 1"
14	10	12' 11"
15	10	13' 9"

Vertical Steel = #4 @ 9" O.C. in each face. = A_{sv}
Dowels "L" bars from tank to footing shall be #4 @ 9" O.C. at the interior mat of steel. 26" vertical leg, 10" horizontal leg

NRCS *Natural Resources Conservation Services* *United States Department of Agriculture*	_____ *County, PA* ***ROUND TANK DETAIL*** ***PA-083*** ***Page 3.32***	Designed *PA NRCS* *12/01* Drawn *Hartz* *8/14/08* Revisions *Pereverzoff* *1/9/08* Checked _____ Approved _____